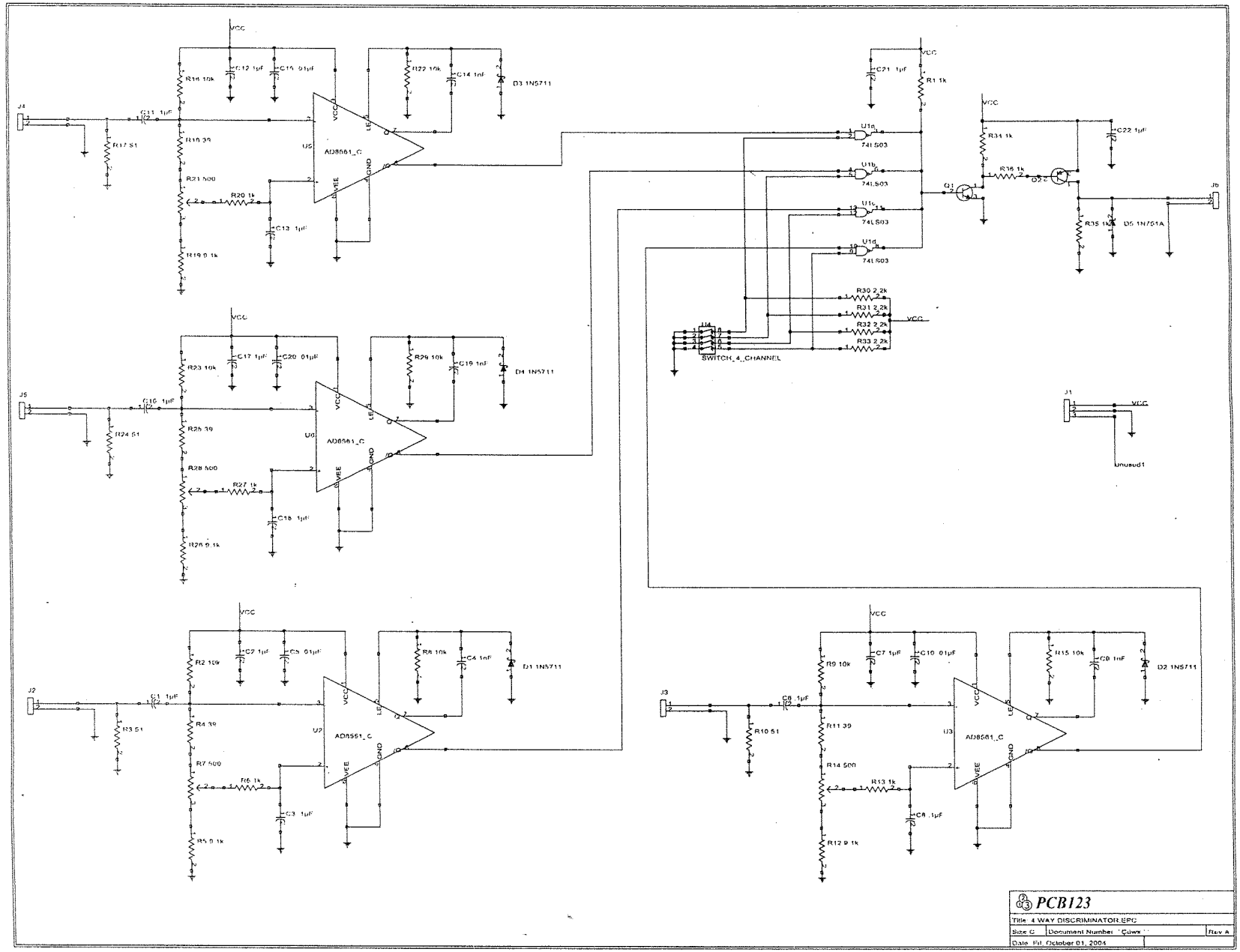
PCB123
Title: 4 WAY DISCRIMINATOR.EPC
Size C
Document Number
Rev A
Date: Fri, October 01, 2004
AD8561_C
74LS03
SWITCH_4_CHANNEL
D1 1N5711
D2 1N5711
D3 1N5711
D4 1N5711
D5 1N751A
VCC
unused1